VECTOR650ONEDESIGN

MIXEDOFFSHOREYACHTING

6.50 classemini

Boat Description

The Vector 6.5 is a well proven one-design serial yacht for Classe Mini events worldwide. Our yacht competed at the Mini Transat 2019 (4.000nm) and made victories and the podiums at some other single and double handed events. Currently 16 yachts have been sold in Europe and America. A complete ready-to-race Vector 6.5 cost 58.000.- EUR (ex VAT).

The Vector is 6.5 meters long and 3m wide. The overall weight is 990kg for the Transat. 7 sails are on board for all winds up gale force. It has a fixed keel and no foils. The Vector 6.5 and the other Class Mini yachts are made for single, double and mixed-handed coastal and ocean races under their category A+B and OSR category 1+2.

The scow bow design avoid nose diving, and significantly increases the righting moment and the diagonal stability, which makes the boats very safe in hard handling. Furthermore, this shape reduces the drag of the heeled hull. The Vector 6.5 was the first Mini offshore yacht, who had this scow bow design in a serial production! The Class 40 and IMOCA 60 are following this path of innovative design.

LOA:	6.50 m / 21.32 ft
Beam:	2.98 m / 9.77 ft
Draft:	1.60 m / 5.25 ft
Displ:	990kg / 2182.58 lbs
Air Draft:	11 m / 36.09 ft

Mainsail (3 reefs):	24 sqm / 258.3 sqft
Solent Jib (1 reef):	19 sqm / 204.5 sqft
Spinnacker Maxi	80 sqm / 861 sqft
Spinnacker Medi	63 sqm / 678 sqft
Head Gennacker	38 sqm / 409 sqft
Code 0:	25 sqm / 269 sqft
Storm Jib:	4.5 sqm / 48.4 sqft

Marketing Materials

Appendix 1

Websites: www.mixedyachting.com & www.vector650.com
Facebook: https://www.facebook.com/vector650/

History of the Evolution

The Vector 6.5 was inspired from the Classe Mini prototype of "Lilienthal", that has concluded spectacular in 2nd position at the Mini Transat 2017 and 3rd position in 2019 overall. The "Lilienthal" is the yacht No. 934 in the Classe Mini and designed by Etienne Bertrand. The hull has been revised and optimized on the specifications of the series boat and based on the feedbacks obtained after the Transat. The Vector scow bow design is comfortable and reassuring, to reduce the stress of the skipper during the race, but also to allow a more accessible use, educational and recreational use.

The design looks to the future with round entry lines and large volume at the bow. The 934 boat has shown impressive speeds in some cases and being born also for foiling use. The designer Etienne Bertrand has made a great design effort to further improve the design of the proto and to give maximum comfort to the skipper.
The Vector 6.5 is a boat that is potentially very fast (top speed over 20kts) but also very comfortable for long cruises.

A great innovation is the use of 3Dcore for the hull construction that makes the boat very light but tough and long-lived. The builder the Yacht Service shipyard in Poland has a long experience in fiberglass infusion construction and now knows the Class Mini world thanks to the prototypes built in 2015.

The boat is be a product which comes from the encounter of a great designer, an excellent construction site and a professional sailor with a long Mini experience. The first serial Vector 6.5 came on the market in 2018. So far more 16 boats have been sold. Some archived victory and podium results in single- and double handed races.

Construction

The Vector 6.5 is made in a 3D-Core construction. This material is made from recycled PET. Lighter and stronger than soric. 3D-core simply make holes in foam. These holes result a hexagon structure or derivations of it. In the production of the composite parts the structure is filled with resin. The cured resin in the structure and the foam core create a hybrid with excellent technical properties. The construction in infusion with 3D CORE guarantees maximum lightness and strength. Infusion process. Female mould polyester resin. Mini Class rules for serial production.

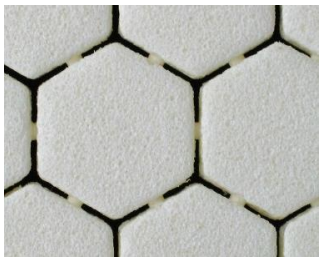

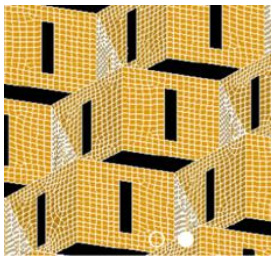

The 3D|CORE™ structure is a honeycomb frame in a foam core. Reinforce the structure inside a foam core. During the production of composite parts, the structure will be filled with resin. The cured resin and the foam core build a hybrid composite with excellent technical properties.

No carbon is used in the construction under the serial Classe Mini rules. The Mast and boom are in Aluminium.

Sustainability

We strive to be at the forefront of sustainability in boat building. From the manufacturing process to recycling. As far as is currently possible, we support the circular economy by using materials for boatbuilding, which are available and suitable for extreme offshore sailing yachts. We also strive for carbon offsetting by supporting a nature conservation project in Denmark, where afforestation takes place. We are very interested to work together with the department of sustainability and environment at World Sailing to make sail racing a more sustainable sport worldwide.

Technical Data and Measured Sailing Performance

Appendix 2-4

Vector 6.5 Race Results in Classe Mini Events 2019

1st serie / 3rd overall	LA CHRONO single
3rd serie	DUO CONCAMEAUX double
4rd overall	GP ITALIA double
1st overall	BALTIC 500 double
1st and 2nd overall	222 GENOVA single
12th serie	MINI TRANSAT premiere for Keni Piperol from Guardalupe.

Double Handed Sailing

The Classe Mini yachts are well proven for double handed sailing. Around 30% of their races worldwide, are double handed events. Some are sailed by mixed teams. Around 20 events are in the official Classe Mini calendar. But they have also other events like the “Baltic 500” where the double-handed Minis and mixed teams have their own fleet.

Fleet Size

The racing events have 10-80 participating yachts. Serial + Proto in one fleet.
The "serial" yachts have the biggest fleet size inside the Classe Mini events.

At their longest races from France via Canarian Islands to the Caribbean (4.000nm+). The serial yacht had 65 competing yachts. The proto has 22 yachts.

Overall than 1000 yachts are built for the Classe Mini since 1977.

Final Statements

We think the Classe Mini 6.50 is the perfect playground for an Olympic offshore campaign. They have the largest fleets and a very strong competition in offshore sailing worldwide.

- Simple, seaworthy and affordable yachts with their offshore category A+B and OSR category 1+2.
- Leading innovation with superfast scow designs for maximum speed on all courses.
- Well proven construction and equipment for rough offshore conditions.
- Worldwide class structure with single, double and mixed handed races. 10-80 yachts per race.
- The perfect starting point for the youth into offshore sail racing.
- Used boats from 20k EUR. New boats from 58k EUR. Charter boats available.
- Unique spirit and friendship between the sailors around the globe.
- Sailors of all weights and size can sail a Mini 6.50 at the top level.
- Easy to handle and transport on a trailer.

5 years before the Olympic Games are starting in 2024, the Classe Mini 6.50 yachts have already an event on the Olympic waters in France! It is the „Corsica Med" Regatta. Start in Marseille and runs over 500nm to Corsica and back.

Vector 6.5 One Design Highlights

The Vector 6.5 is a well proven and high quality Classe Mini yacht with excellent racing results. All for a very competitive price.

- One yacht for Ocean and Olympic sailing.
- Real offshore racing for a very fair budget.
- New and superfast scow design for maximum speed on all courses.
- Classe Mini 6.50 with sailors and shorthanded events worldwide.
- Well proven offshore construction with high quality equipment.
- No motor needed. 100% Sailing! Zero Emission.
- Easy handling and transport on a trailer.

Vector 6.5 price ready-to-race in EUR (ex VAT)

39.000.- basic yacht with mast and fittings
8.200.- set with 7 sails
3.700.- safety pack incl. liferaft + grab pack
7.100.- electronics

58.000.- complete ready to rock the ocean!
Trailer is 4.000.- EUR

Contact: www.mixedyachting.org
Roland Gaebler
Strassburger Str. 32 / 28211 Bremen / Germany
Email: teamgaebler@gmail.com / Tel. +49-172-4543074 / Skype: r.gaebler

VECTOR650ONEDESIGN
MIXEDOFFSHOREYACHTING

www.mixedyachting.org

Roland & Nahid Gaebler
teamgaebler@gmail.com
+49-172-4543074

- **One yacht for Ocean and Olympic sailing.**
- **Real offshore racing for a very fair budget.**
- **New and superfast scow design for maximum speed on all courses.**
- **Classe Mini 6.50 with sailors and shorthanded events worldwide.**
- **Well proven offshore construction with high quality equipment.**
- **No motor needed. 100% Sailing!**
- **Easy handling and transport on a trailer.**

6.50 classemini

Category A/B
OSR category 1/2

Prices in EUR ex VAT (Olympic Version)

39.000.- basic yacht with mast and fittings
8.200.- set with 7 sails
3.700.- safety pack incl. liferaft + grab pack
7.100.- electronics

58.000.- complete ready to rock the ocean!

Upgrade to single-handed Mini Transat version include autopilot, antifouling and hull numbers is 5.300.- Trailer is 4.000.- EUR

BOAT

Name **VECTOR 6.5**
Sail Nr **MINI**

GPH

676,5

GENERAL

Class	**VECTOR 6.5**
Designer	**ETIENNE BERTRAND**
Builder	**YS POLAND**
Series	**01.2018**
Age	**01.2019**
Age Allow ance	**0,033%**
Offset File	**clvector6.5.off - 11.12.2019 11:14:54**
Measurement by	**CLUB - 11.12.2019**

HULL

Length Overall	**6,500m**
Maximum Beam	**2,978m**
Displacement	**995kg**
Draft	**1,589m**
IMS Reg. Division	**Performance**
Dynamic Allow ance	**0,000%**
Fw d Accommodation	**No**
Hull Construction	**Cored**
Carbon Rudder	**No**
Crew Arm Extension	

IMSL	**5,932m**	VCGD	**-0,102m**	Sink	**11,25kg/mm**
RL	**5,707m**	VCGM	**-0,081m**	WS	**13,20m²**
LSM0	**5,466m**	Displacement/Length ratio			**6,0928**

ORC
Offshore Racing Congress
World leader in rating technology

2019 (Test)
ORC International Certificate

SCORING OPTIONS

	COASTAL / LONG DISTANCE			WINDWARD / LEEWARD		
Time on Distance	**665,6**			**752,3**		
Time on Time	**0,9014**			**0,8972**		
Triple Number	Low	Medium	High	Low	Medium	High
Time on Distance	**744,9**	**614,3**	**532,3**	**949,5**	**768,8**	**653,3**
Time on Time	**0,9062**	**1,0989**	**1,2680**	**0,7109**	**0,8780**	**1,0332**

Rating Office

--- TEST ---
--- CERTIFICATE ---
--- NOT VALID ---
--- FOR RACING ---

TEST

TIME ALLOWANCES

Wind Velocity	6 kt	8 kt	10 kt	12 kt	14 kt	16 kt	20 kt
Beat VMG	**1087,0**	**949,5**	**914,1**	**883,9**	**868,0**	**848,6**	**851,2**
52°	**720,3**	**644,2**	**616,6**	**604,3**	**596,5**	**586,9**	**581,1**
60°	**680,7**	**619,3**	**592,9**	**578,3**	**569,9**	**561,0**	**548,1**
75°	**646,2**	**589,8**	**560,7**	**538,0**	**525,1**	**517,9**	**497,9**
90°	**646,9**	**588,3**	**541,7**	**508,5**	**486,7**	**473,5**	**456,0**
110°	**645,9**	**571,2**	**530,0**	**497,5**	**447,7**	**421,7**	**389,7**
120°	**658,5**	**573,0**	**512,3**	**474,7**	**442,9**	**410,6**	**346,7**
135°	**725,3**	**610,6**	**543,0**	**480,2**	**423,7**	**374,9**	**307,5**
150°	**843,4**	**682,4**	**601,8**	**542,5**	**489,4**	**427,7**	**289,7**
Run VMG	**973,8**	**787,5**	**687,6**	**617,2**	**565,9**	**493,9**	**334,5**
Selected Courses							
Windward / Leeward	**1030,4**	**868,5**	**800,9**	**750,6**	**716,9**	**671,3**	**592,9**
Circular Random	**902,2**	**744,1**	**660,2**	**609,0**	**572,8**	**543,7**	**496,1**
Coastal / Long Distance	**1024,8**	**818,0**	**720,3**	**647,9**	**599,2**	**548,6**	**462,4**
Non Spinnaker	**996,0**	**810,6**	**711,9**	**653,5**	**615,3**	**587,6**	**547,8**

Velocity Prediction in Knots for True Wind Speeds

Wind Velocity	6 kt	8 kt	10 kt	12 kt	14 kt	16 kt	20 kt
Beat Angles	**42,2°**	**39,4°**	**42,4°**	**41,5°**	**41,0°**	**40,4°**	**40,6°**
Beat VMG	**3,31**	**3,79**	**3,94**	**4,07**	**4,15**	**4,24**	**4,23**
52°	**5,00**	**5,59**	**5,84**	**5,96**	**6,03**	**6,13**	**6,20**
60°	**5,29**	**5,81**	**6,07**	**6,22**	**6,32**	**6,42**	**6,57**
75°	**5,57**	**6,10**	**6,42**	**6,69**	**6,86**	**6,95**	**7,23**
90°	**5,56**	**6,12**	**6,65**	**7,08**	**7,40**	**7,60**	**7,90**
110°	**5,57**	**6,30**	**6,79**	**7,24**	**8,04**	**8,54**	**9,24**
120°	**5,47**	**6,28**	**7,03**	**7,58**	**8,13**	**8,77**	**10,38**
135°	**4,96**	**5,90**	**6,63**	**7,50**	**8,50**	**9,60**	**11,71**
150°	**4,27**	**5,28**	**5,98**	**6,64**	**7,36**	**8,42**	**12,43**
Run VMG	**3,70**	**4,57**	**5,24**	**5,83**	**6,36**	**7,29**	**10,76**
Gybe Angles	**146,5°**	**151,1°**	**157,9°**	**180,0°**	**180,0°**	**139,9°**	**146,2°**

Certificate

Number **TEST**
ORC Ref **N/A**
Issued On **11.12.2019**
VPP Ver. **2019 1.01**
Invalid for Racing

Crew Weight

Default	291kg
Maximum	**90kg**
Minimum*	**5kg**

when applied by the NoR and SI

Non Manual Pwr **No**

Special Scoring

	ToD	ToT
Double H.GPH	**665,7**	**0,9013**
Double H.OSN	**653,0**	**0,9188**
Non Spin GPH	**732,1**	**0,8196**
Non Spin OSN	**714,1**	**0,8402**

Sails Limitations

Headsails	Spinnakers
5	**3**

Class Division Length

CDL = **5,820**

Storm Sails Areas

Heavy Weather Jib	**12,14**
Storm Jib (JL=6,17)	**4,50**
Storm Trysail	**4,87**

Owner

I certify that I understand my responsibilities under ORC Rules and Regulations

Signature

BOAT

Name	**VECTOR 6.5**	Sail Nr	**MINI**
File	**vector6.5**	Data in	**meters/kilograms**

RIG

Forestay Tension	**Aft**	Spreaders	**2**
Inner Stay	**None Fitted**	Runners	**2**
Carbon Mast	**No**	Jumper Struts	**None**
Taper Hollows	**No**	Jib Furler	**No**
Fiber Rigging	**No**	Main Furler	**No**
Lenticular Rigging	**No**	Without Backstay	**No**
Articulated Bowsprit	**Yes**		

P	**9,300**	E	**2,989**	MDT1	**0,065**	MW	**0,120**
IG	**9,480**	J	**3,018**	MDL1	**0,120**	GO	**0,120**
ISP	**10,130**	SFJ	**0,000**	MDT2		BD	**0,127**
BAS	**0,830**	SPL		MDL2		MWT	
FSP	**-2,000**	TPS	**5,390**	TL	**0,000**	MCG	

INCLINING TEST AND FREEBOARDS

Inclining Test **Enter VCG directly**

Flotation date **11.12.2019** SG

VCGDe **-0,102**

FFM	FF	**0,840**	SFFP	**0,401**
FAM	FA	**0,754**	SAFP	**6,498**

LCF from stem on CL / on sheer	**3,532 / 3,819**
Maximum beam station from stem	**4,811**
RM Measured	**63,2kg·m**
RM Default	**37,2kg·m**
Limit of positive stability / Stab.Index	**110,3° / 101,6**
Freeboard at mast at 3,018	**0,894**

ORC
Offshore Racing Congress
World leader in rating technology

2019
IMS Measurement Certificate

MIZZEN RIG AND SAILS

N/A

PROPELLER

Type **No Propeller**

Certificate

Number **TEST**
ORC Ref **N/A**
Issued On **11.12.2019**
VPP Ver. **2019 1.01**
Invalid for Racing

TEST

COMMENTS

MOVABLE BALLAST

N/A

CENTERBOARD

N/A

SAILS (Maximum Areas)

Mainsail	MHB	MUW	MTW	MHW	MQW	Area	Area (r)	Formula
	1,800	1,80	2,15	2,55	2,80	22,80	23,41	P/8 · (E + 2·MQW+ 2·MHW + 1.5·MTW + MUW + 0.5·MHB)

Symmetric
Not Available

Asymmetric	SLU	SLE	SL	SHW	SFL		
on centerline	12,00	10,00	11,00	9,00	7,64	80,01	AS · (SFL + 4·SHW) / 6

HEADSAILS

Area = 0.1125·HLU · (1.445·HLP + 2·HQW + 2·HHW + 1.5·HTW + HUW + 0.5·HHB), HS flying rated area = 25.05

HHB	HUW	HTW	HHW	HQW	HLP	HLU	Area	Btn	Fly	Meas.Date	Material	Comment
0,10			2,35		4,50	10,50	24,22		Y		Unknow	
0,15			1,85		3,55	9,50	17,51	Y			Unknow	

ORC
Offshore Racing Congress
World leader in rating technology

2019 (Test)
Certificate Appendix
Sail Plan

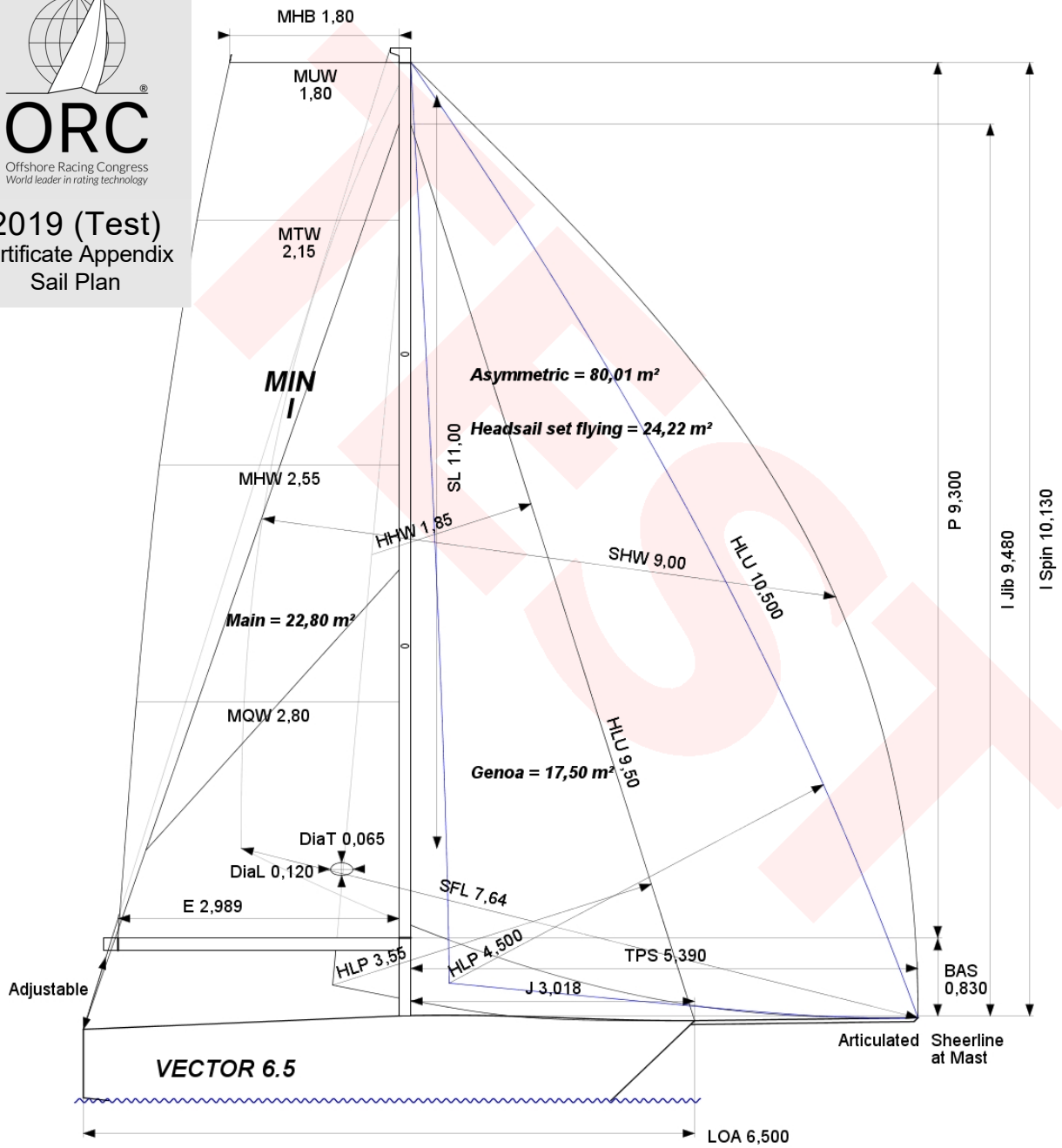

SAILS INVENTORY

MAINSAIL (1)

Id	MHB	MUW	MTW	MHW	MQW	Area	Measurer	Meas.Date	Manufacture	Material	Comment
Main	1,80	1,80	2,15	2,55	2,80	22,81				Unknown	

HEADSAILS (2)

Id	HHB	HUW	HTW	HHW	HQW	HLP	HLU	Ovrlp	Area	Btn	Fly	Measurer	Meas.Date	Manufacture	Material	Comment
C0	0,10			2,35		4,50	10,50	149%	24,22		Y				Unknow	
Jib	0,15			1,85		3,55	9,50	118%	17,51	Y					Unknow	

SYMMETRIC SPINNAKERS (0)

Id	SLU	SLE	SL	SHW	SFL	Area	Measurer	Meas.Date	Manufacture	Material	Comment

ASYMMETRIC SPINNAKERS (1)

Id	SLU	SLE	SL	SHW	SFL	Area	Kind	Measurer	Meas.Date	Manufacture	Material	Comment
A2	12,00	10,00	11,00	9,00	7,64	80,01	asym				Unknown	

Speed Guide

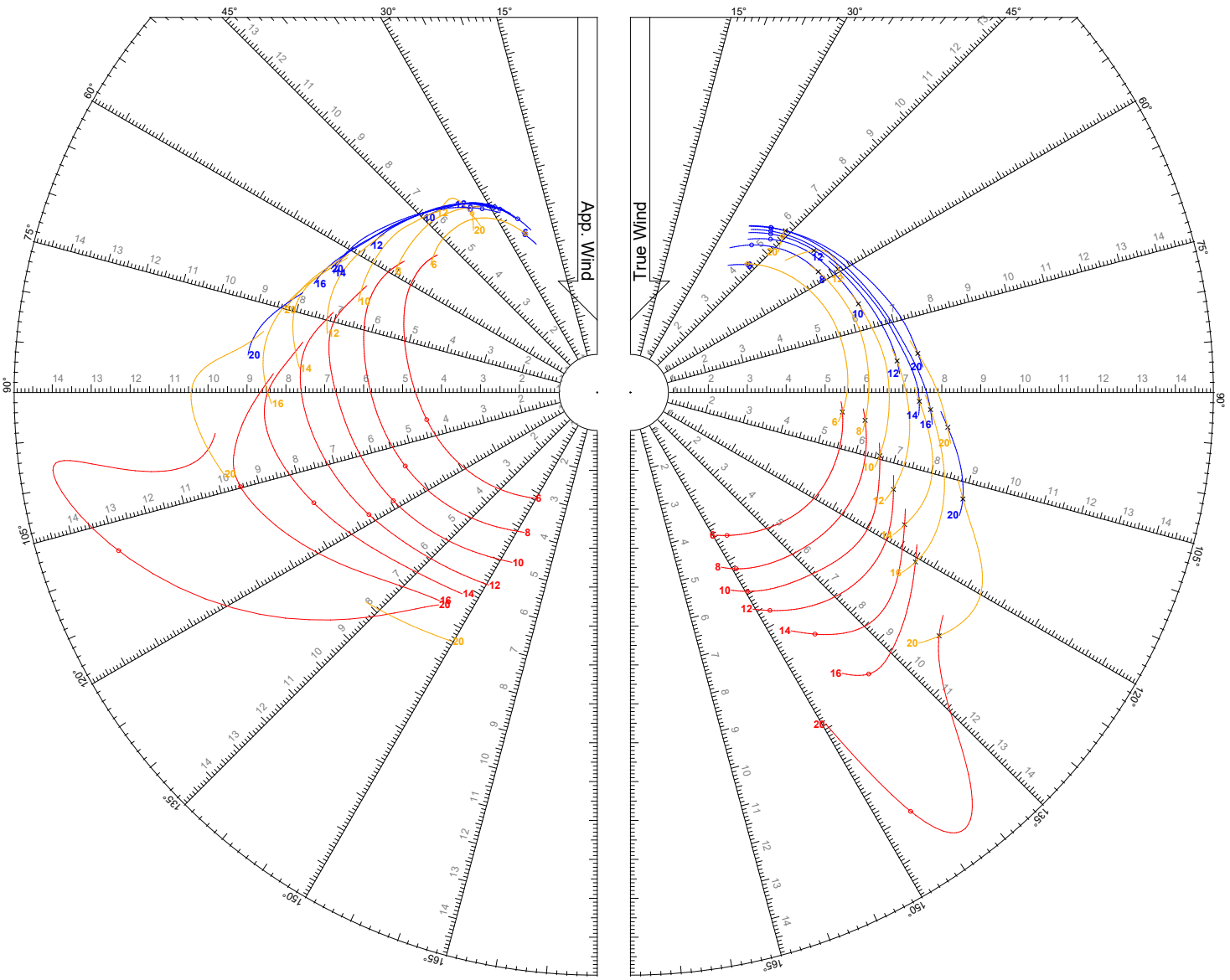

Polar Plot for Boat	
Name	**VECTOR 6.5**
Sail Number	**MINI**
Class	**VECTOR 6.5**
Designer	**ETIENNE BERTRAND**
Builder	**YS POLAND**
Issued On	**11.12.2019 - VPP 2019 1.01**

TWS: 6, 8, 10, 12, 14, 16, 20 kts

Jib

Asymmetric Spinnaker on Centerline

Code Zero

Speed Guide

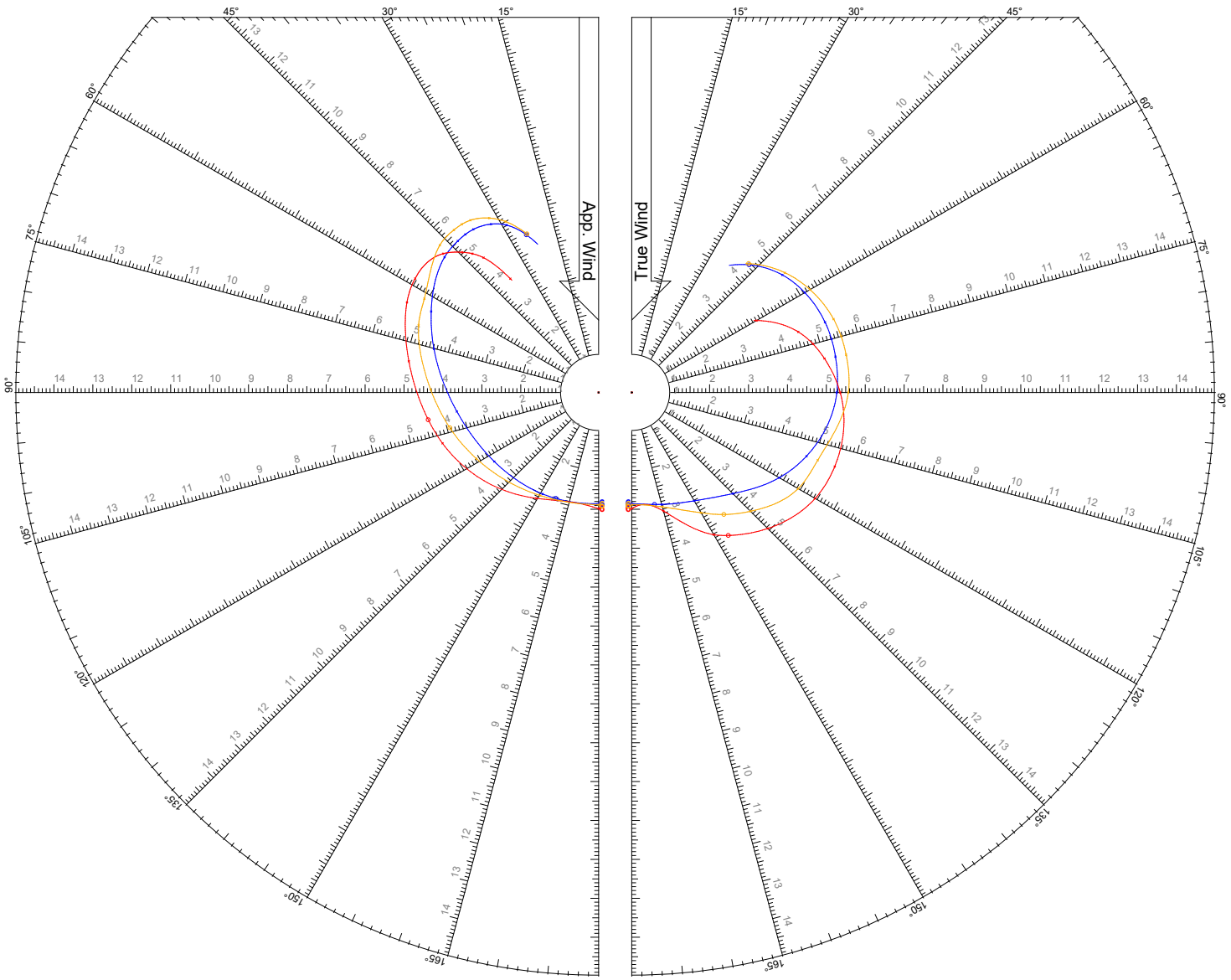

Polar Plot for Boat	
Name	**VECTOR 6.5**
Sail Number	**MINI**
Class	**VECTOR 6.5**
Designer	**ETIENNE BERTRAND**
Builder	**YS POLAND**
Issued On	**11.12.2019 - VPP 2019 1.01**

TWS: 6 kts

Jib

Asymmetric Spinnaker on Centerline

Code Zero

Speed Guide

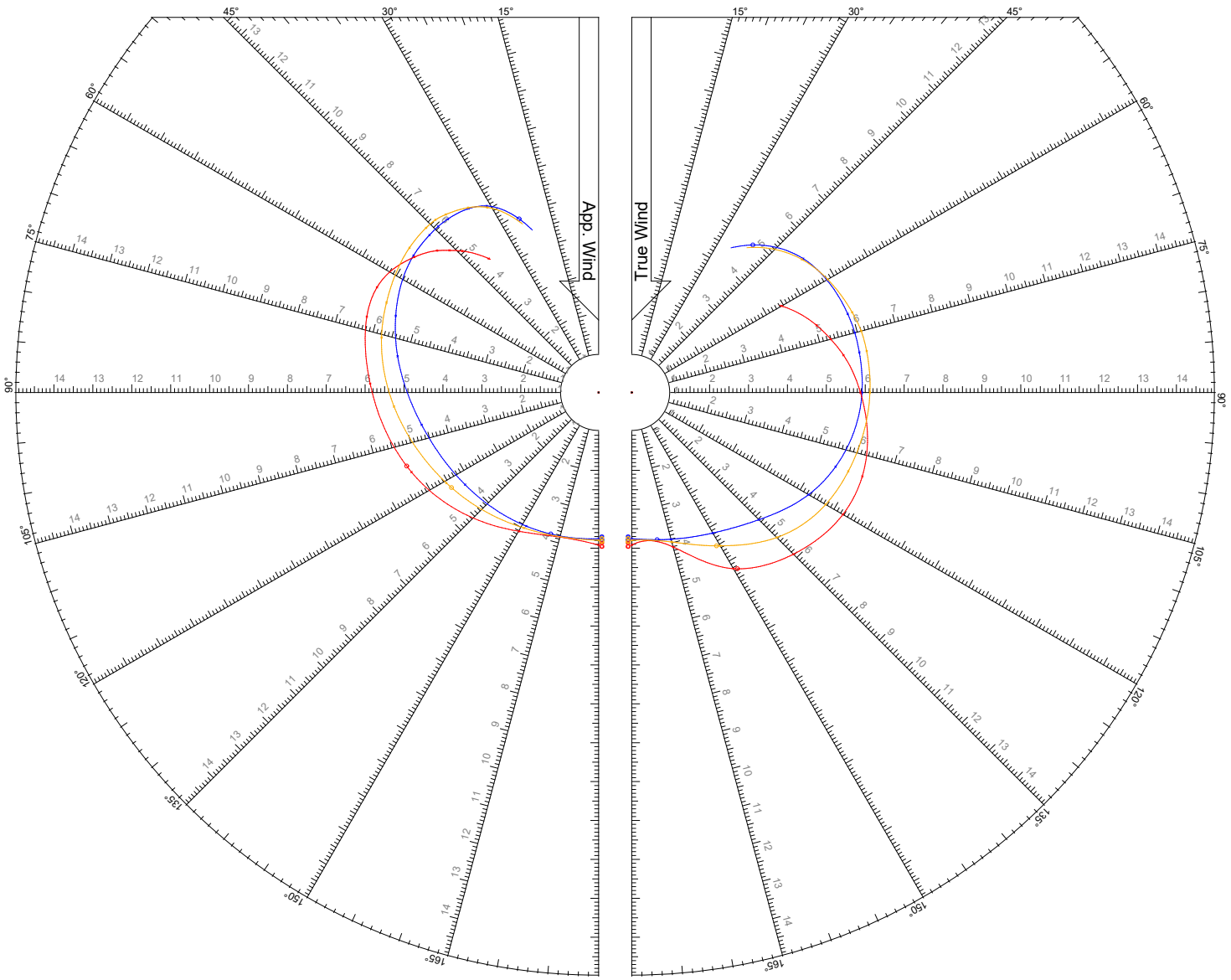

Polar Plot for Boat	
Name	**VECTOR 6.5**
Sail Number	**MINI**
Class	**VECTOR 6.5**
Designer	**ETIENNE BERTRAND**
Builder	**YS POLAND**
Issued On	**11.12.2019 - VPP 2019 1.01**

TWS: 8 kts

Jib

Asymmetric Spinnaker on Centerline

Code Zero

Speed Guide

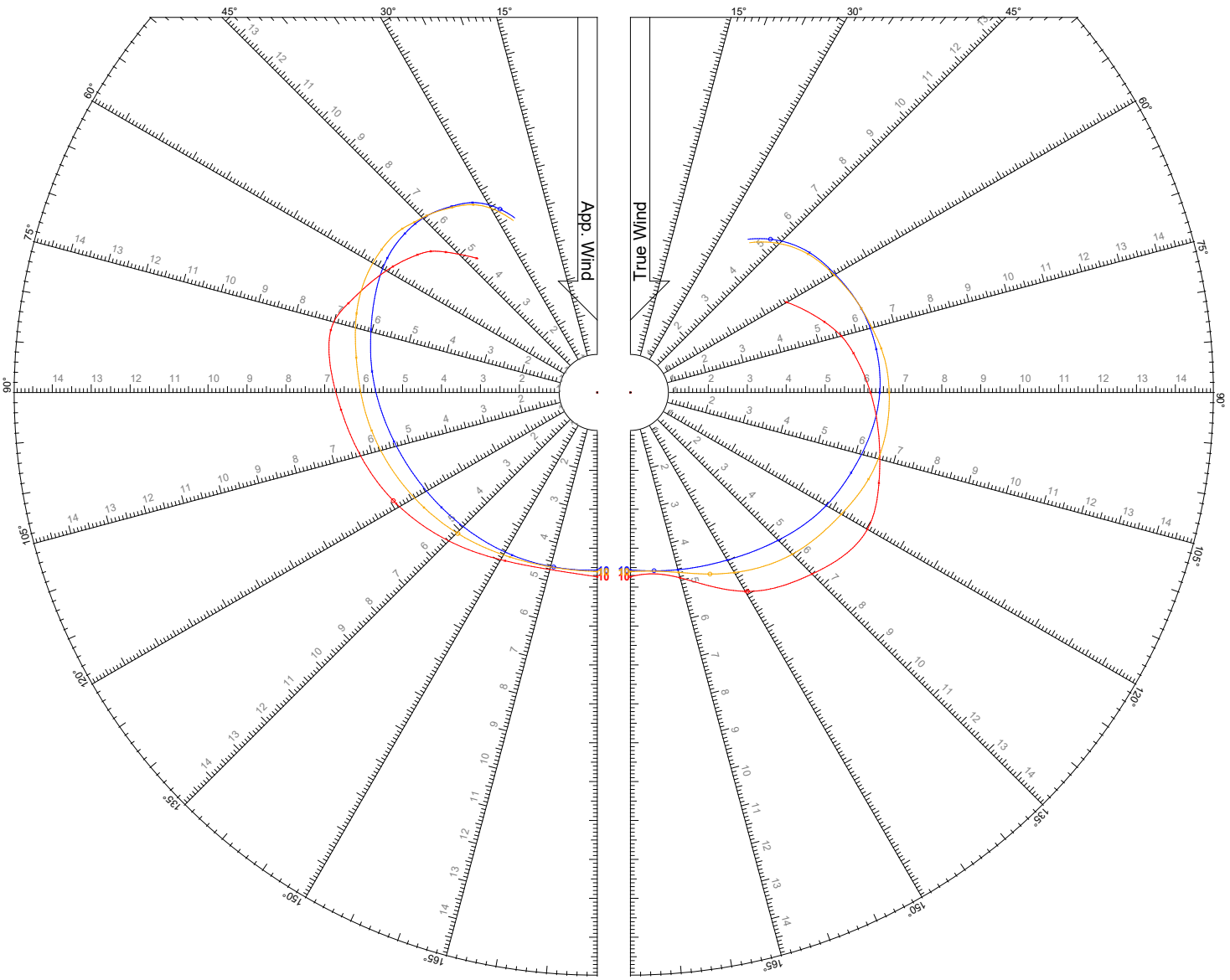

Polar Plot for Boat	
Name	**VECTOR 6.5**
Sail Number	**MINI**
Class	**VECTOR 6.5**
Designer	**ETIENNE BERTRAND**
Builder	**YS POLAND**
Issued On	**11.12.2019 - VPP 2019 1.01**

TWS: 10 kts

Jib

Asymmetric Spinnaker on Centerline

Code Zero

Speed Guide

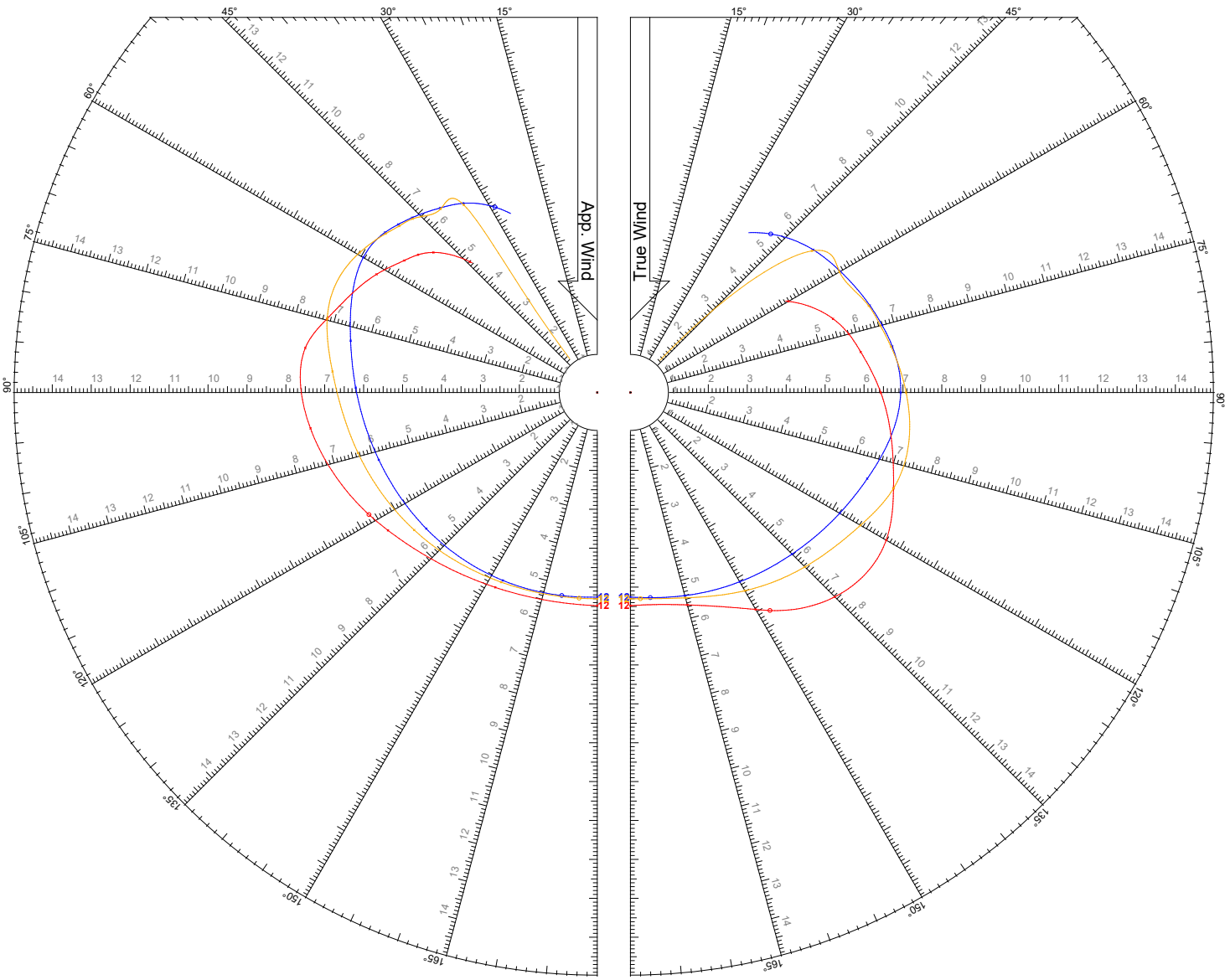

Polar Plot for Boat	
Name	**VECTOR 6.5**
Sail Number	**MINI**
Class	**VECTOR 6.5**
Designer	**ETIENNE BERTRAND**
Builder	**YS POLAND**
Issued On	**11.12.2019 - VPP 2019 1.01**

TWS: 12 kts

Jib

Asymmetric Spinnaker on Centerline

Code Zero

Speed Guide

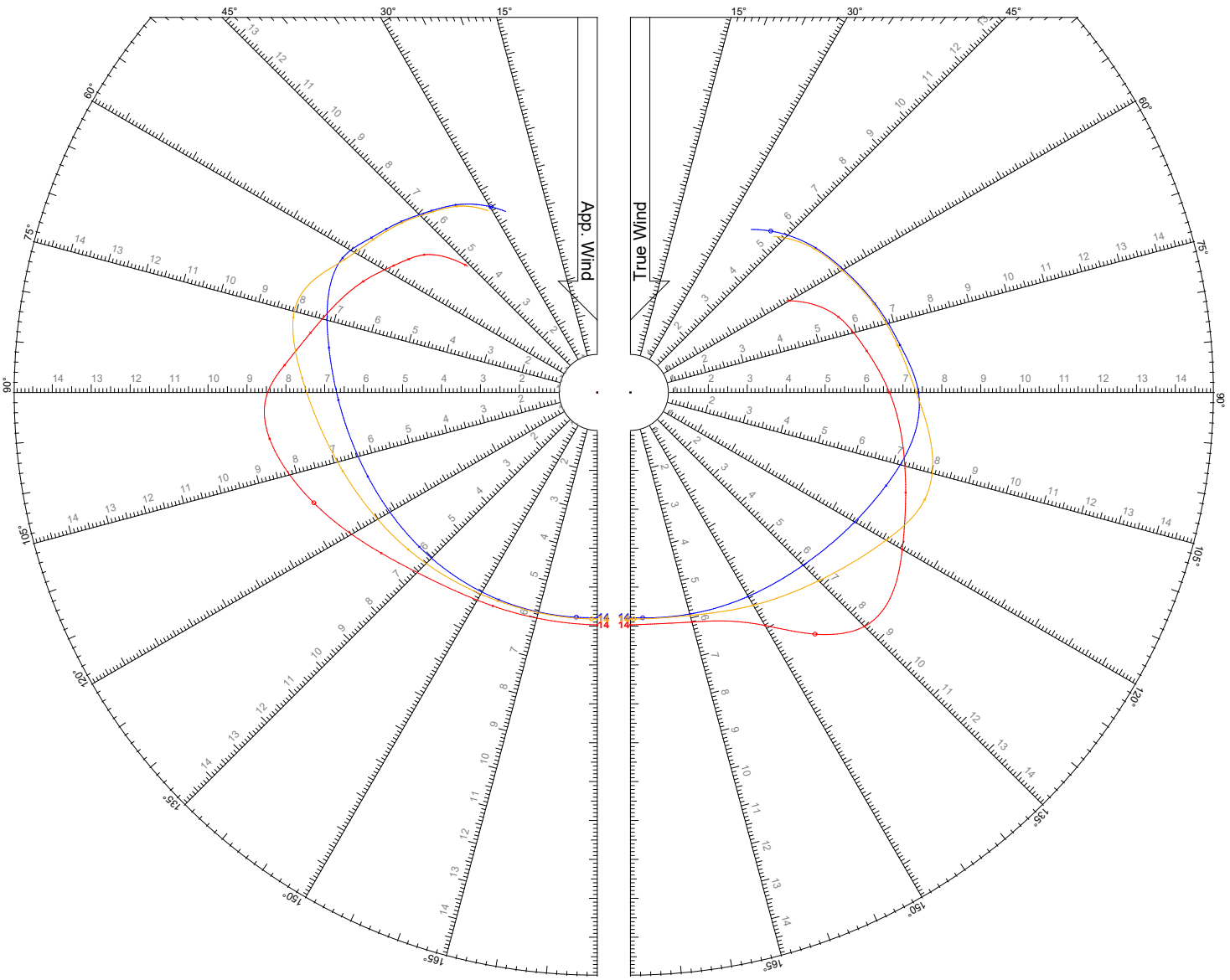

Polar Plot for Boat	
Name	**VECTOR 6.5**
Sail Number	**MINI**
Class	**VECTOR 6.5**
Designer	**ETIENNE BERTRAND**
Builder	**YS POLAND**
Issued On	**11.12.2019 - VPP 2019 1.01**

TWS: 14 kts

Jib

Asymmetric Spinnaker on Centerline

Code Zero

Speed Guide

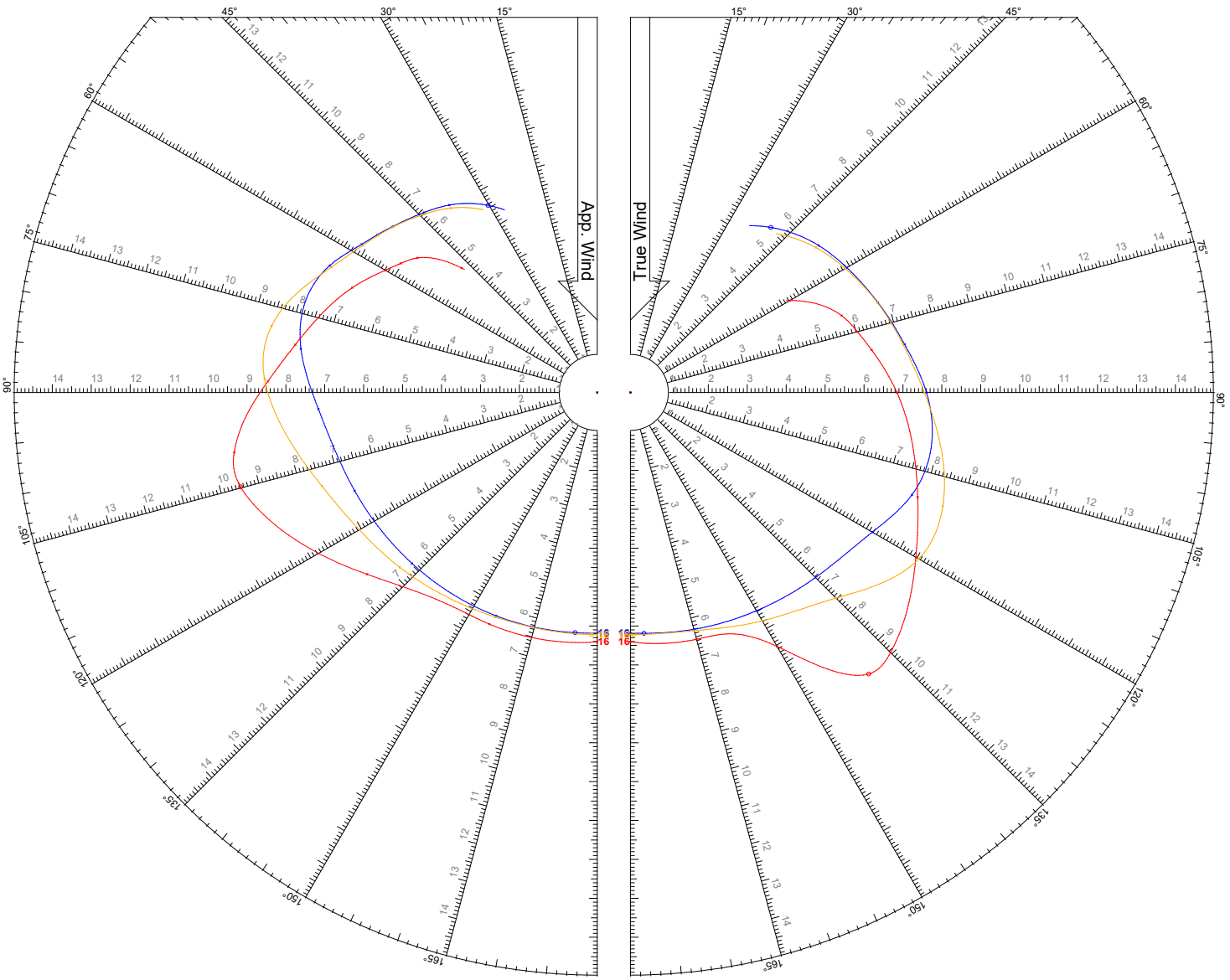

Polar Plot for Boat	
Name	**VECTOR 6.5**
Sail Number	**MINI**
Class	**VECTOR 6.5**
Designer	**ETIENNE BERTRAND**
Builder	**YS POLAND**
Issued On	**11.12.2019 - VPP 2019 1.01**

TWS: 16 kts

Jib

Asymmetric Spinnaker on Centerline

Code Zero

Speed Guide

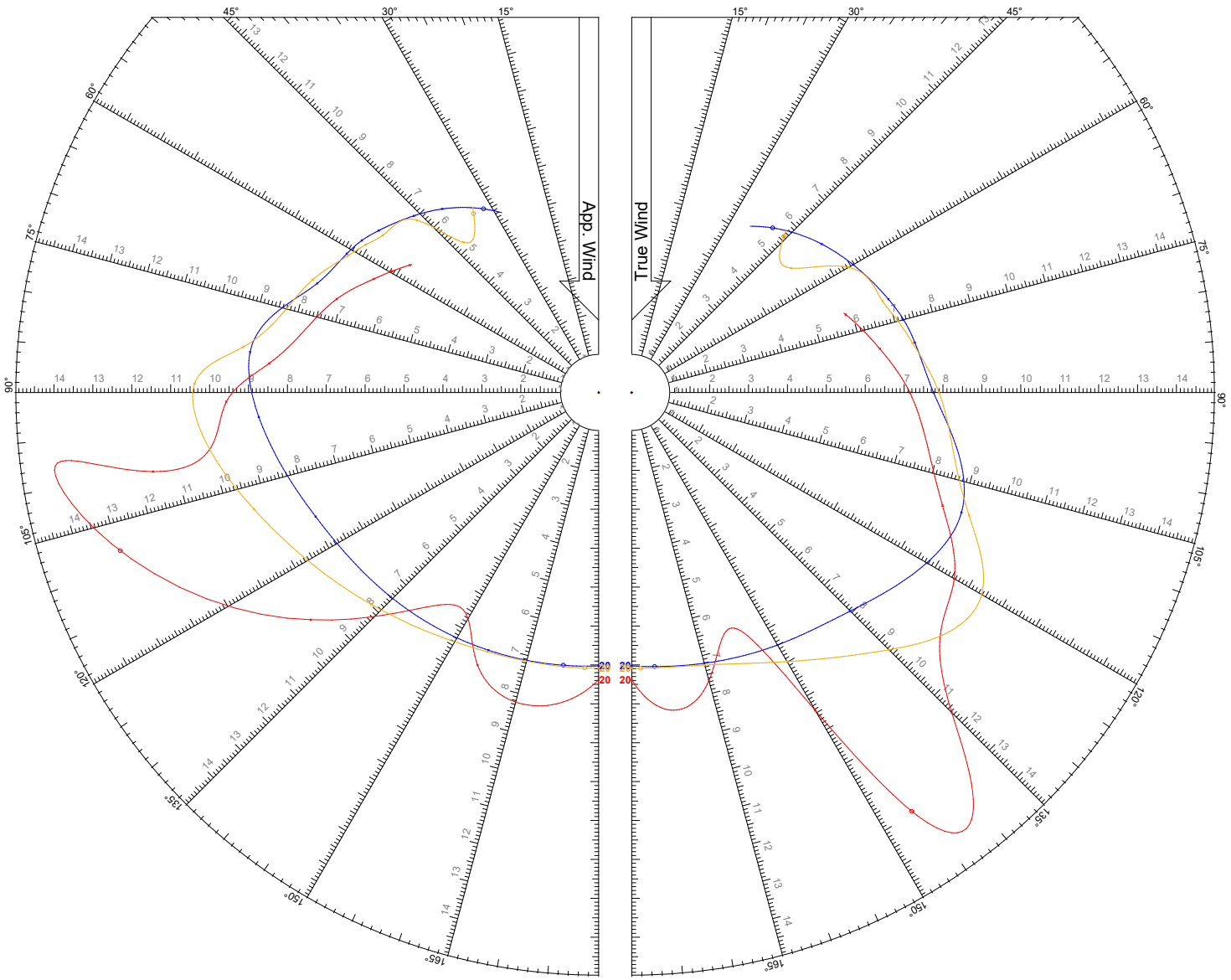

Polar Plot for Boat	
Name	**VECTOR 6.5**
Sail Number	**MINI**
Class	**VECTOR 6.5**
Designer	**ETIENNE BERTRAND**
Builder	**YS POLAND**
Issued On	**11.12.2019 - VPP 2019 1.01**

TWS: 20 kts

Jib

Asymmetric Spinnaker on Centerline

Code Zero

Polar Tables

Boat Name: **VECTOR 6.5**
Sail No: **MINI**
Sail: **Best Performance**
Issued On: **11.12.2019 - VPP 2019 1.01**

TWS = 6 Kts

TWA	BTV	VMG	AWS	AWA	Heel	Reef	Flat
42,2° (b)	4,47	3,31	9,79	24,3°	11,9°	1,00	0,95
52°	5,00	3,08	9,90	28,5°	12,0°	1,00	0,95
60°	5,29	2,65	9,78	32,1°	11,9°	1,00	0,96
70°	5,52	1,89	9,44	36,7°	12,4°	1,00	0,97
75°	5,57	1,44	9,19	39,1°	11,9°	1,00	0,98
80°	5,59	0,97	8,89	41,7°	11,2°	1,00	1,00
90°	5,57	0,00	8,18	47,1°	9,0°	1,00	1,00
110°	5,58	1,91	6,65	58,0°	12,4°	1,00	0,97
120°	5,47	2,73	5,75	64,6°	9,2°	1,00	1,00
135°	4,97	3,51	4,30	80,3°	4,4°	1,00	1,00
150°	4,25	3,68	3,14	107,5°	2,0°	1,00	1,00
165°	3,52	3,40	2,76	145,7°	1,2°	1,00	1,00
180°	3,28	3,28	2,72	180,0°	0,9°	1,00	1,00
146,5° (r)	4,44	3,70	3,36	99,7°	2,3°	1,00	1,00

TWS = 8 Kts

TWA	BTV	VMG	AWS	AWA	Heel	Reef	Flat
39,4° (b)	4,91	3,79	12,20	24,6°	12,9°	1,00	0,94
52°	5,59	3,44	12,26	30,9°	13,5°	1,00	0,96
60°	5,81	2,91	12,01	35,2°	15,0°	1,00	0,85
70°	6,03	2,06	11,55	40,6°	15,6°	1,00	0,93
75°	6,11	1,58	11,25	43,4°	15,1°	1,00	0,95
80°	6,13	1,06	10,89	46,3°	14,5°	1,00	0,97
90°	6,12	0,00	10,07	52,6°	13,8°	1,00	1,00
110°	6,30	2,16	8,32	64,6°	16,7°	1,00	0,95
120°	6,28	3,14	7,30	71,8°	16,4°	1,00	1,00
135°	5,90	4,17	5,66	87,6°	6,7°	1,00	1,00
150°	5,28	4,57	4,33	112,4°	2,7°	1,00	1,00
165°	4,53	4,38	3,81	147,1°	1,4°	1,00	1,00
180°	4,27	4,27	3,73	180,0°	1,0°	1,00	1,00
151,1° (r)	5,22	4,57	4,25	114,8°	2,5°	1,00	1,00

TWS = 10 Kts

TWA	BTV	VMG	AWS	AWA	Heel	Reef	Flat
42,4° (b)	5,34	3,94	14,40	27,9°	16,0°	1,00	0,80
52°	5,84	3,60	14,35	33,3°	17,6°	1,00	0,84
60°	6,07	3,04	14,06	38,0°	18,5°	1,00	0,90
70°	6,32	2,16	13,53	44,0°	19,2°	0,99	0,80
75°	6,42	1,66	13,21	47,0°	19,1°	0,98	0,87
80°	6,54	1,14	12,87	50,0°	20,0°	1,00	0,91
90°	6,65	0,00	12,01	56,4°	16,7°	1,00	1,00
110°	6,79	2,32	9,98	70,3°	21,2°	0,94	0,92
120°	7,03	3,51	8,89	76,8°	20,0°	1,00	0,98
135°	6,63	4,69	7,08	93,5°	10,0°	1,00	1,00
150°	5,98	5,18	5,67	118,2°	3,6°	1,00	1,00
165°	5,38	5,20	5,00	148,8°	1,6°	1,00	1,00
180°	5,13	5,13	4,87	180,0°	1,1°	1,00	1,00
157,9° (r)	5,65	5,24	5,22	133,8°	2,2°	1,00	1,00

TWS = 12 Kts

TWA	BTV	VMG	AWS	AWA	Heel	Reef	Flat
41,5° (b)	5,44	4,07	16,47	28,9°	17,4°	1,00	0,66
52°	5,96	3,67	16,36	35,3°	18,9°	1,00	0,70
60°	6,23	3,11	16,05	40,4°	19,8°	1,00	0,75
70°	6,54	2,24	15,51	46,6°	20,7°	1,00	0,82
75°	6,69	1,73	15,18	49,8°	23,5°	1,00	0,89
80°	6,83	1,19	14,80	53,0°	21,2°	1,00	0,93
90°	7,08	0,00	13,93	59,5°	23,7°	1,00	0,93
110°	7,19	2,46	11,69	74,7°	15,6°	1,00	1,00
120°	7,59	3,79	10,51	81,3°	21,7°	0,94	0,93
135°	7,50	5,30	8,54	96,6°	15,1°	1,00	1,00
150°	6,64	5,75	7,08	122,0°	4,8°	1,00	1,00
165°	6,03	5,82	6,37	150,8°	2,0°	1,00	1,00
180°	5,83	5,83	6,17	180,0°	1,1°	1,00	1,00
180,0° (r)	5,83	5,83	6,17	180,0°	1,1°	1,00	1,00

TWS = 14 Kts

TWA	BTV	VMG	AWS	AWA	Heel	Reef	Flat
41,0° (b)	5,50	4,15	18,50	29,8°	17,9°	0,74	0,58
52°	6,04	3,72	18,34	37,0°	19,7°	1,00	0,59
60°	6,32	3,16	18,01	42,3°	20,5°	1,00	0,63
70°	6,68	2,29	17,45	48,9°	23,9°	1,00	0,71
75°	6,86	1,78	17,11	52,2°	24,1°	1,00	0,75
80°	7,03	1,22	16,72	55,5°	24,3°	1,00	0,81
90°	7,40	0,00	15,84	62,1°	24,0°	1,00	0,94
110°	8,04	2,75	13,55	76,1°	19,6°	1,00	1,00
120°	8,06	4,03	12,17	85,0°	21,8°	0,88	0,89
135°	8,50	6,01	10,00	98,0°	21,7°	1,00	0,99
150°	7,31	6,33	8,49	124,5°	6,2°	1,00	1,00
165°	6,57	6,35	7,84	152,5°	2,4°	1,00	1,00
180°	6,36	6,36	7,64	180,0°	0,5°	1,00	1,00
180,0° (r)	6,36	6,36	7,64	180,0°	0,4°	1,00	1,00

TWS = 16 Kts

TWA	BTV	VMG	AWS	AWA	Heel	Reef	Flat
40,4° (b)	5,57	4,24	20,56	30,3°	18,3°	0,50	0,58
52°	6,14	3,78	20,36	38,3°	19,6°	0,59	0,58
60°	6,42	3,21	20,00	43,9°	20,2°	0,68	0,58
70°	6,77	2,31	19,39	50,9°	24,1°	1,00	0,60
75°	6,95	1,80	19,02	54,3°	24,3°	1,00	0,64
80°	7,15	1,24	18,62	57,8°	24,6°	1,00	0,69
90°	7,61	0,00	17,72	64,6°	24,8°	1,00	0,81
110°	8,54	2,92	15,34	78,5°	21,8°	0,97	0,94
120°	8,55	4,28	13,87	87,7°	21,6°	1,00	1,00
135°	9,46	6,69	11,47	99,3°	22,0°	1,00	0,88
150°	8,21	7,11	9,79	125,2°	8,1°	1,00	1,00
165°	7,15	6,90	9,28	153,5°	3,0°	1,00	1,00
180°	6,90	6,90	9,10	180,0°	1,3°	1,00	1,00
139,9° (r)	9,54	7,29	10,66	104,7°	21,6°	1,00	0,99

TWS = 20 Kts

TWA	BTV	VMG	AWS	AWA	Heel	Reef	Flat
40,6° (b)	5,57	4,23	24,50	32,1°	19,4°	0,42	0,58
52°	6,20	3,82	24,31	40,4°	23,1°	0,45	0,58
60°	6,57	3,29	23,97	46,3°	23,4°	0,46	0,58
70°	7,02	2,40	23,35	53,6°	23,9°	0,49	0,58
75°	7,23	1,87	22,96	57,3°	22,9°	0,51	0,58
80°	7,39	1,28	22,49	61,1°	23,0°	0,62	0,58
90°	7,90	0,00	21,50	68,5°	24,4°	0,82	0,80
110°	9,22	3,15	18,94	82,8°	26,0°	0,93	0,90
120°	10,39	5,19	17,32	88,7°	21,9°	0,93	0,94
135°	11,63	8,22	14,36	100,1°	21,8°	0,88	0,85
150°	11,85	10,26	11,40	118,7°	16,9°	1,00	1,00
165°	8,70	8,41	11,81	154,0°	4,3°	1,00	1,00
180°	8,27	8,27	11,73	180,0°	1,6°	1,00	1,00
146,2° (r)	12,95	10,76	11,71	108,3°	21,6°	1,00	1,00

Polar Tables

Boat Name: **VECTOR 6.5**
Sail No: **MINI**
Sail: **Jib**
Issued On: **11.12.2019 - VPP 2019 1.01**

TWS = 6 Kts

TWA	BTV	VMG	AWS	AWA	Heel	Reef	Flat
42,6° (b)	4,46	3,28	9,33	23,5°	10,2°	1,00	0,99
52°	4,91	3,02	9,40	27,4°	10,5°	1,00	1,00
60°	5,14	2,57	9,24	31,0°	10,0°	1,00	1,00
70°	5,29	1,81	8,87	35,8°	9,0°	1,00	1,00
75°	5,31	1,38	8,61	38,3°	8,3°	1,00	1,00
80°	5,32	0,92	8,32	40,9°	7,7°	1,00	1,00
90°	5,27	0,00	7,65	46,5°	6,3°	1,00	1,00
110°	4,78	1,63	5,98	61,4°	3,5°	1,00	1,00
120°	4,38	2,19	5,10	72,1°	2,5°	1,00	1,00
135°	3,67	2,60	4,00	94,5°	1,7°	1,00	1,00
150°	3,21	2,78	3,27	120,5°	1,4°	1,00	1,00
165°	2,98	2,88	2,84	149,2°	1,2°	1,00	1,00
180°	2,85	2,85	2,76	180,0°	0,3°	1,00	1,00
168,5° (r)	2,94	2,88	2,79	156,5°	0,4°	1,00	1,00

TWS = 8 Kts

TWA	BTV	VMG	AWS	AWA	Heel	Reef	Flat
39,4° (b)	4,91	3,79	11,59	23,3°	12,9°	1,00	0,94
52°	5,59	3,44	11,64	29,2°	13,5°	1,00	0,96
60°	5,79	2,89	11,38	33,4°	13,3°	1,00	1,00
70°	5,91	2,02	10,84	38,8°	13,5°	1,00	1,00
75°	5,94	1,54	10,50	41,6°	13,6°	1,00	1,00
80°	5,94	1,03	10,17	44,7°	12,2°	1,00	1,00
90°	5,92	0,00	9,43	51,1°	9,5°	1,00	1,00
110°	5,57	1,91	7,62	66,7°	5,0°	1,00	1,00
120°	5,25	2,62	6,65	76,9°	3,5°	1,00	1,00
135°	4,62	3,27	5,36	97,4°	2,3°	1,00	1,00
150°	4,17	3,61	4,41	121,8°	1,7°	1,00	1,00
165°	3,90	3,77	3,84	149,7°	1,4°	1,00	1,00
180°	3,76	3,76	3,72	180,0°	1,0°	1,00	1,00
170,2° (r)	3,84	3,78	3,75	160,1°	1,2°	1,00	1,00

TWS = 10 Kts

TWA	BTV	VMG	AWS	AWA	Heel	Reef	Flat
42,4° (b)	5,34	3,94	13,54	26,2°	16,0°	1,00	0,80
52°	5,84	3,60	13,45	31,0°	17,6°	1,00	0,84
60°	6,07	3,04	13,11	35,4°	18,5°	1,00	0,90
70°	6,31	2,16	12,57	41,1°	18,0°	1,00	0,97
75°	6,38	1,65	12,25	44,2°	17,4°	1,00	1,00
80°	6,41	1,11	11,93	47,7°	14,9°	1,00	1,00
90°	6,40	0,00	11,06	54,6°	14,0°	1,00	1,00
110°	6,03	2,06	9,17	72,0°	6,7°	1,00	1,00
120°	5,81	2,90	8,17	82,1°	4,7°	1,00	1,00
135°	5,37	3,80	6,75	100,9°	3,1°	1,00	1,00
150°	4,97	4,31	5,64	123,9°	2,3°	1,00	1,00
165°	4,72	4,55	4,94	150,7°	1,6°	1,00	1,00
180°	4,56	4,56	4,79	180,0°	0,4°	1,00	1,00
172,4° (r)	4,62	4,58	4,80	165,1°	1,3°	1,00	1,00

TWS = 12 Kts

TWA	BTV	VMG	AWS	AWA	Heel	Reef	Flat
41,5° (b)	5,44	4,07	15,37	27,0°	17,4°	1,00	0,66
52°	5,96	3,67	15,17	32,8°	18,9°	1,00	0,70
60°	6,23	3,11	14,79	37,4°	19,8°	1,00	0,75
70°	6,54	2,24	14,17	43,2°	20,7°	1,00	0,82
75°	6,69	1,73	13,67	45,7°	23,5°	1,00	0,89
80°	6,83	1,19	13,41	49,3°	21,2°	1,00	0,93
90°	6,94	0,00	12,62	56,6°	18,6°	1,00	1,00
110°	6,47	2,21	10,74	75,8°	8,9°	1,00	1,00
120°	6,21	3,10	9,71	86,6°	6,2°	1,00	1,00
135°	5,87	4,15	8,22	104,8°	4,1°	1,00	1,00
150°	5,62	4,86	6,96	126,3°	2,9°	1,00	1,00
165°	5,40	5,22	6,15	151,9°	2,0°	1,00	1,00
180°	5,26	5,26	5,97	180,0°	0,4°	1,00	1,00
174,4° (r)	5,30	5,27	5,96	169,5°	1,4°	1,00	1,00

TWS = 14 Kts

TWA	BTV	VMG	AWS	AWA	Heel	Reef	Flat
41,0° (b)	5,50	4,15	17,15	27,8°	17,9°	0,74	0,58
52°	6,04	3,72	16,87	34,3°	19,7°	1,00	0,59
60°	6,32	3,16	16,44	39,2°	20,5°	1,00	0,63
70°	6,68	2,29	15,61	44,8°	23,9°	1,00	0,71
75°	6,86	1,78	15,22	48,0°	24,1°	1,00	0,75
80°	7,03	1,22	14,79	51,2°	24,3°	1,00	0,81
90°	7,40	0,00	13,92	57,9°	24,0°	1,00	0,94
110°	6,99	2,39	12,28	78,2°	12,2°	1,00	1,00
120°	6,65	3,33	11,25	89,6°	8,2°	1,00	1,00
135°	6,28	4,44	9,73	108,1°	5,5°	1,00	1,00
150°	6,05	5,24	8,42	129,0°	3,9°	1,00	1,00
165°	5,89	5,69	7,54	153,3°	2,5°	1,00	1,00
180°	5,79	5,79	7,31	180,0°	0,8°	1,00	1,00
176,9° (r)	5,80	5,79	7,30	174,4°	1,4°	1,00	1,00

TWS = 16 Kts

TWA	BTV	VMG	AWS	AWA	Heel	Reef	Flat
40,4° (b)	5,57	4,24	18,82	28,2°	18,3°	0,50	0,58
52°	6,14	3,78	18,53	35,6°	19,6°	0,59	0,58
60°	6,42	3,21	18,11	40,8°	20,2°	0,68	0,58
70°	6,77	2,31	17,19	46,8°	24,1°	1,00	0,60
75°	6,95	1,80	16,76	50,2°	24,3°	1,00	0,64
80°	7,15	1,24	16,31	53,5°	24,6°	1,00	0,69
90°	7,61	0,00	15,36	60,3°	24,8°	1,00	0,81
110°	7,69	2,63	13,60	79,0°	17,6°	1,00	1,00
120°	7,18	3,59	12,75	91,4°	11,1°	1,00	1,00
135°	6,72	4,75	11,22	110,3°	7,4°	1,00	1,00
150°	6,48	5,61	9,89	131,0°	5,0°	1,00	1,00
165°	6,30	6,09	9,01	154,6°	3,0°	1,00	1,00
180°	6,18	6,18	8,78	180,0°	1,4°	1,00	1,00
176,8° (r)	6,20	6,19	8,77	174,5°	1,7°	1,00	1,00

TWS = 20 Kts

TWA	BTV	VMG	AWS	AWA	Heel	Reef	Flat
40,6° (b)	5,57	4,23	21,99	29,8°	19,4°	0,42	0,58
52°	6,20	3,82	21,48	36,9°	23,1°	0,45	0,58
60°	6,57	3,29	21,02	42,5°	23,4°	0,46	0,58
70°	7,02	2,40	20,28	49,5°	23,9°	0,49	0,58
75°	7,23	1,87	19,98	53,4°	22,9°	0,51	0,58
80°	7,39	1,28	19,53	57,3°	23,0°	0,62	0,58
90°	7,76	0,00	18,27	64,9°	25,3°	1,00	0,60
110°	9,02	3,08	15,69	80,1°	27,0°	1,00	0,92
120°	8,76	4,38	14,82	92,1°	23,2°	1,00	1,00
135°	7,94	5,62	13,96	112,3°	12,7°	1,00	1,00
150°	7,49	6,49	12,70	133,2°	8,2°	1,00	1,00
165°	7,20	6,96	11,86	156,0°	4,6°	1,00	1,00
180°	7,03	7,03	11,68	180,0°	1,9°	1,00	1,00
175,2° (r)	7,07	7,04	11,66	172,3°	2,6°	1,00	1,00

ORC
Offshore Racing Congress
World leader in rating technology

www.orc.org

Polar Tables

Boat Name: **VECTOR 6.5**
Sail No: **MINI**
Sail: **Asymmetric Spinnaker on CL**
Issued On: **11.12.2019 - VPP 2019 1.01**

TWS = 6 Kts

TWA	BTV	VMG	AWS	AWA	Heel	Reef	Flat
60°	3,70	1,85	8,16	36,6°	8,8°	1,00	0,94
70°	4,55	1,56	8,33	38,8°	11,8°	1,00	0,94
75°	4,82	1,25	8,26	40,4°	12,4°	1,00	0,93
80°	5,03	0,87	8,11	42,1°	12,9°	1,00	0,93
90°	5,36	0,00	7,70	45,9°	12,6°	1,00	0,94
110°	5,55	1,90	6,35	55,3°	11,6°	1,00	0,98
120°	5,44	2,72	5,54	62,2°	8,6°	1,00	1,00
135°	4,94	3,49	4,16	78,1°	4,1°	1,00	1,00
150°	4,22	3,65	2,99	105,1°	1,9°	1,00	1,00
165°	3,15	3,05	2,82	148,2°	1,2°	1,00	1,00
180°	2,98	2,98	2,75	180,0°	0,2°	1,00	1,00
145,9° (r)	4,43	3,67	3,25	96,2°	2,3°	1,00	1,00

TWS = 8 Kts

TWA	BTV	VMG	AWS	AWA	Heel	Reef	Flat
60°	4,45	2,22	10,37	37,6°	14,2°	0,97	0,82
70°	5,05	1,73	10,23	41,9°	14,3°	0,93	0,76
75°	5,29	1,37	10,08	44,1°	14,4°	0,93	0,75
80°	5,53	0,96	9,88	46,3°	15,0°	0,93	0,76
90°	5,88	0,00	9,26	50,6°	17,8°	0,97	0,81
110°	6,30	2,16	7,75	61,3°	16,7°	1,00	0,95
120°	6,27	3,13	6,78	68,4°	15,2°	1,00	1,00
135°	5,88	4,15	5,39	85,0°	6,3°	1,00	1,00
150°	5,23	4,53	4,10	110,5°	2,5°	1,00	1,00
165°	4,11	3,97	3,84	148,9°	1,5°	1,00	1,00
180°	3,92	3,92	3,73	180,0°	1,0°	1,00	1,00
149,0° (r)	5,28	4,53	4,17	108,4°	2,6°	1,00	1,00

TWS = 10 Kts

TWA	BTV	VMG	AWS	AWA	Heel	Reef	Flat
60°	4,64	2,32	12,11	40,0°	14,2°	0,83	0,79
70°	5,30	1,81	11,91	44,6°	15,9°	0,83	0,76
75°	5,61	1,45	11,72	46,9°	16,8°	0,83	0,78
80°	5,82	1,01	11,44	49,5°	17,5°	0,84	0,78
90°	6,17	0,00	10,74	54,9°	19,0°	0,88	0,76
110°	6,79	2,32	8,94	66,3°	21,2°	0,94	0,92
120°	7,03	3,51	8,00	73,1°	20,0°	1,00	0,98
135°	6,60	4,66	6,60	90,8°	9,2°	1,00	1,00
150°	5,90	5,11	5,33	116,5°	3,1°	1,00	1,00
165°	4,93	4,76	4,97	150,1°	1,9°	1,00	1,00
180°	4,74	4,74	4,82	180,0°	0,3°	1,00	1,00
149,5° (r)	5,93	5,11	5,36	115,5°	3,3°	1,00	1,00

TWS = 12 Kts

TWA	BTV	VMG	AWS	AWA	Heel	Reef	Flat
60°	4,69	2,34	13,76	42,2°	14,2°	0,75	0,75
70°	5,54	1,89	13,57	46,7°	17,0°	0,75	0,76
75°	5,81	1,50	13,31	49,4°	17,8°	0,75	0,78
80°	6,01	1,04	12,97	52,4°	18,4°	0,75	0,80
90°	6,43	0,00	12,19	58,1°	19,8°	0,77	0,82
110°	7,19	2,46	10,29	70,8°	21,6°	0,87	0,89
120°	7,59	3,79	9,23	77,6°	21,7°	0,94	0,93
135°	7,42	5,25	7,82	94,3°	13,4°	1,00	1,00
150°	6,44	5,58	6,61	121,0°	4,1°	1,00	1,00
165°	5,65	5,46	6,09	151,1°	2,4°	1,00	1,00
180°	5,48	5,48	5,90	180,0°	0,3°	1,00	1,00
147,4° (r)	6,65	5,60	6,76	115,6°	5,0°	1,00	1,00

TWS = 14 Kts

TWA	BTV	VMG	AWS	AWA	Heel	Reef	Flat
60°	4,72	2,36	15,33	43,7°	16,3°	0,69	0,77
70°	5,68	1,94	15,16	48,6°	17,7°	0,68	0,78
75°	5,94	1,54	14,85	51,6°	18,3°	0,68	0,80
80°	6,16	1,07	14,48	54,7°	19,0°	0,68	0,82
90°	6,65	0,00	13,60	60,7°	20,6°	0,68	0,91
110°	7,52	2,57	11,71	74,6°	21,7°	0,84	0,76
120°	8,06	4,03	10,57	81,5°	21,8°	0,88	0,89
135°	8,50	6,01	8,67	95,3°	21,7°	1,00	0,99
150°	6,91	5,99	8,02	124,7°	5,1°	1,00	1,00
165°	6,11	5,90	7,53	152,9°	3,1°	1,00	1,00
180°	5,97	5,97	7,29	180,0°	1,2°	1,00	1,00
142,6° (r)	7,81	6,21	8,36	108,9°	10,0°	1,00	1,00

TWS = 16 Kts

TWA	BTV	VMG	AWS	AWA	Heel	Reef	Flat
60°	4,73	2,37	16,91	45,1°	16,6°	0,63	0,77
70°	5,78	1,98	16,72	50,2°	18,1°	0,62	0,79
75°	6,04	1,56	16,38	53,4°	18,8°	0,63	0,80
80°	6,29	1,09	15,98	56,6°	19,6°	0,63	0,82
90°	6,85	0,00	15,04	62,9°	21,2°	0,63	0,92
110°	7,85	2,69	13,12	77,5°	21,8°	0,79	0,74
120°	8,47	4,23	11,95	84,9°	21,9°	0,86	0,78
135°	9,45	6,68	9,92	96,8°	21,9°	1,00	0,89
150°	7,53	6,53	9,36	126,6°	6,6°	1,00	1,00
165°	6,57	6,34	8,98	154,1°	4,0°	1,00	1,00
180°	6,41	6,41	8,75	180,0°	1,3°	1,00	1,00
139,8° (r)	9,48	7,24	9,24	102,4°	21,6°	1,00	1,00

TWS = 20 Kts

TWA	BTV	VMG	AWS	AWA	Heel	Reef	Flat
60°	-0,01	-0,01	11,72	45,3°	54,3°	0,48	0,62
70°	5,85	2,00	19,77	52,9°	18,9°	0,54	0,79
75°	6,16	1,59	19,38	56,3°	19,7°	0,54	0,80
80°	6,47	1,12	18,93	59,7°	20,5°	0,54	0,82
90°	7,15	0,00	17,95	66,5°	21,6°	0,54	0,92
110°	8,50	2,91	15,94	81,7°	21,8°	0,68	0,76
120°	9,57	4,79	14,58	88,0°	21,9°	0,70	0,92
135°	11,63	8,22	12,25	96,9°	21,8°	0,88	0,85
150°	9,43	8,16	11,59	126,8°	11,0°	1,00	1,00
165°	7,66	7,40	11,70	155,4°	6,3°	1,00	1,00
180°	7,38	7,38	11,56	180,0°	1,6°	1,00	1,00
146,2° (r)	12,95	10,76	10,07	105,3°	21,6°	1,00	1,00

ORC
Offshore Racing Congress
World leader in rating technology

www.orc.org

Polar Tables

Boat Name: **VECTOR 6.5**
Sail No: **MINI**
Sail: **Asymmetric Spinnaker on Pole**
Issued On: **11.12.2019 - VPP 2019 1.01**

TWS = 6 Kts

TWA	BTV	VMG	AWS	AWA	Heel	Reef	Flat
60°	3,72	1,86	8,19	36,6°	9,1°	1,00	0,94
70°	4,57	1,56	8,37	38,8°	12,0°	1,00	0,93
75°	4,83	1,25	8,27	40,4°	13,2°	1,00	0,92
80°	5,03	0,87	8,12	42,2°	13,8°	1,00	0,92
90°	5,36	0,00	7,71	45,9°	13,5°	1,00	0,93
110°	5,58	1,91	6,37	55,3°	12,4°	1,00	0,97
120°	5,47	2,73	5,56	62,2°	9,2°	1,00	1,00
135°	4,97	3,51	4,19	78,2°	4,4°	1,00	1,00
150°	4,25	3,68	3,00	105,0°	2,0°	1,00	1,00
165°	3,52	3,40	2,56	144,2°	1,2°	1,00	1,00
180°	3,28	3,28	2,51	180,0°	0,9°	1,00	1,00
146,5° (r)	4,44	3,70	3,23	97,2°	2,3°	1,00	1,00

TWS = 8 Kts

TWA	BTV	VMG	AWS	AWA	Heel	Reef	Flat
60°	4,43	2,21	10,37	37,7°	14,4°	0,95	0,81
70°	5,03	1,72	10,23	42,0°	14,4°	0,91	0,78
75°	5,27	1,36	10,08	44,3°	14,5°	0,91	0,77
80°	5,50	0,96	9,88	46,4°	15,1°	0,91	0,78
90°	5,86	0,00	9,26	50,7°	18,1°	0,95	0,82
110°	6,30	2,15	7,71	61,3°	18,4°	1,00	0,95
120°	6,28	3,14	6,78	68,5°	16,4°	1,00	1,00
135°	5,90	4,17	5,42	85,1°	6,7°	1,00	1,00
150°	5,28	4,57	4,12	110,2°	2,7°	1,00	1,00
165°	4,53	4,38	3,55	145,7°	1,4°	1,00	1,00
180°	4,27	4,27	3,44	180,0°	1,0°	1,00	1,00
151,1° (r)	5,22	4,57	4,04	112,6°	2,5°	1,00	1,00

TWS = 10 Kts

TWA	BTV	VMG	AWS	AWA	Heel	Reef	Flat
60°	4,62	2,31	12,12	40,1°	14,4°	0,82	0,79
70°	5,27	1,80	11,92	44,8°	16,1°	0,82	0,76
75°	5,58	1,45	11,73	47,1°	17,0°	0,81	0,78
80°	5,80	1,01	11,45	49,7°	17,7°	0,83	0,78
90°	6,15	0,00	10,74	55,1°	18,9°	0,84	0,81
110°	6,76	2,31	8,96	66,7°	21,4°	0,94	0,87
120°	7,03	3,51	8,00	73,3°	20,8°	1,00	0,96
135°	6,63	4,69	6,63	90,8°	10,0°	1,00	1,00
150°	5,98	5,18	5,34	116,0°	3,6°	1,00	1,00
165°	5,38	5,20	4,67	147,7°	1,6°	1,00	1,00
180°	5,13	5,13	4,51	180,0°	1,1°	1,00	1,00
157,9° (r)	5,65	5,24	4,91	132,2°	2,2°	1,00	1,00

TWS = 12 Kts

TWA	BTV	VMG	AWS	AWA	Heel	Reef	Flat
60°	4,66	2,33	13,77	42,3°	14,4°	0,73	0,76
70°	5,51	1,88	13,58	46,9°	17,1°	0,73	0,77
75°	5,78	1,50	13,33	49,6°	17,8°	0,73	0,79
80°	5,98	1,04	12,99	52,6°	18,5°	0,74	0,79
90°	6,40	0,00	12,19	58,3°	19,9°	0,75	0,86
110°	7,15	2,44	10,32	71,2°	21,6°	0,86	0,87
120°	7,53	3,77	9,26	78,2°	21,7°	0,93	0,93
135°	7,50	5,30	7,80	94,1°	15,1°	1,00	1,00
150°	6,64	5,75	6,56	119,8°	4,8°	1,00	1,00
165°	6,03	5,82	5,84	149,5°	2,0°	1,00	1,00
180°	5,83	5,83	5,64	180,0°	1,1°	1,00	1,00
180,0° (r)	5,83	5,83	5,64	180,0°	1,1°	1,00	1,00

TWS = 14 Kts

TWA	BTV	VMG	AWS	AWA	Heel	Reef	Flat
60°	4,68	2,34	15,34	43,8°	16,3°	0,67	0,77
70°	5,65	1,93	15,18	48,7°	17,8°	0,67	0,78
75°	5,91	1,53	14,88	51,7°	18,4°	0,67	0,80
80°	6,13	1,07	14,50	54,9°	19,1°	0,67	0,82
90°	6,62	0,00	13,63	61,0°	20,5°	0,67	0,91
110°	7,44	2,55	11,75	75,2°	21,7°	0,84	0,72
120°	7,92	3,96	10,65	82,7°	21,8°	0,93	0,75
135°	8,50	6,01	8,73	95,6°	21,7°	1,00	0,97
150°	7,31	6,33	7,86	122,6°	6,2°	1,00	1,00
165°	6,57	6,35	7,19	151,3°	2,4°	1,00	1,00
180°	6,36	6,36	6,97	180,0°	0,5°	1,00	1,00
180,0° (r)	6,36	6,36	6,97	180,0°	0,4°	1,00	1,00

TWS = 16 Kts

TWA	BTV	VMG	AWS	AWA	Heel	Reef	Flat
60°	4,68	2,34	16,92	45,2°	16,7°	0,62	0,78
70°	5,75	1,96	16,75	50,4°	18,2°	0,61	0,79
75°	6,01	1,56	16,41	53,6°	18,9°	0,61	0,80
80°	6,26	1,09	16,01	56,8°	19,7°	0,62	0,82
90°	6,80	0,00	15,07	63,2°	21,3°	0,61	0,92
110°	7,77	2,66	13,17	78,1°	21,7°	0,78	0,72
120°	8,39	4,19	11,99	85,5°	21,8°	0,84	0,79
135°	9,46	6,69	9,99	97,1°	22,0°	1,00	0,88
150°	8,21	7,11	9,03	123,4°	8,1°	1,00	1,00
165°	7,15	6,90	8,53	152,5°	3,0°	1,00	1,00
180°	6,90	6,90	8,33	180,0°	1,3°	1,00	1,00
139,9° (r)	9,54	7,29	9,28	102,6°	21,6°	1,00	0,99

TWS = 20 Kts

TWA	BTV	VMG	AWS	AWA	Heel	Reef	Flat
60°	-0,01	-0,01	11,79	45,3°	54,3°	0,48	0,62
70°	5,82	1,99	19,80	53,0°	19,1°	0,53	0,79
75°	6,12	1,59	19,44	56,5°	19,6°	0,53	0,79
80°	6,43	1,12	18,98	59,9°	20,6°	0,53	0,82
90°	7,10	0,00	17,99	66,8°	21,6°	0,53	0,92
110°	8,41	2,88	15,99	82,1°	21,8°	0,67	0,77
120°	9,42	4,71	14,63	88,8°	21,9°	0,68	0,94
135°	11,41	8,07	12,33	98,1°	21,8°	0,85	0,87
150°	11,85	10,26	10,16	116,7°	16,9°	1,00	1,00
165°	8,70	8,41	10,87	153,1°	4,3°	1,00	1,00
180°	8,27	8,27	10,77	180,0°	1,6°	1,00	1,00
148,3° (r)	12,59	10,71	9,87	110,7°	21,6°	1,00	1,00

Polar Tables

Boat Name: **VECTOR 6.5**
Sail No: **MINI**
Sail: **Code Zero**
Issued On: **11.12.2019 - VPP 2019 1.01**

TWS = 6 Kts

TWA	BTV	VMG	AWS	AWA	Heel	Reef	Flat
42,2° (b)	4,47	3,31	9,36	23,1°	11,9°	1,00	0,95
52°	5,00	3,08	9,47	27,0°	12,0°	1,00	0,95
60°	5,29	2,65	9,36	30,3°	11,9°	1,00	0,96
70°	5,52	1,89	9,02	34,6°	12,4°	1,00	0,97
75°	5,57	1,44	8,78	36,9°	11,9°	1,00	0,98
80°	5,59	0,97	8,49	39,4°	11,2°	1,00	1,00
90°	5,57	0,00	7,84	44,8°	9,0°	1,00	1,00
110°	5,09	1,74	6,14	58,9°	5,1°	1,00	1,00
120°	4,94	2,47	5,30	66,3°	3,6°	1,00	1,00
135°	4,32	3,05	3,98	85,0°	2,1°	1,00	1,00
150°	3,57	3,09	3,10	114,8°	1,3°	1,00	1,00
165°	3,04	2,94	2,82	148,8°	1,1°	1,00	1,00
180°	2,88	2,88	2,76	180,0°	0,3°	1,00	1,00
142,9° (r)	3,93	3,14	3,43	99,3°	1,6°	1,00	1,00

TWS = 8 Kts

TWA	BTV	VMG	AWS	AWA	Heel	Reef	Flat
39,8° (b)	4,86	3,73	11,52	23,6°	13,3°	1,00	0,83
52°	5,55	3,42	11,59	29,2°	14,3°	1,00	0,82
60°	5,81	2,91	11,36	33,1°	15,0°	1,00	0,85
70°	6,03	2,06	10,88	38,1°	15,6°	1,00	0,93
75°	6,11	1,58	10,60	40,8°	15,1°	1,00	0,95
80°	6,13	1,06	10,26	43,7°	14,5°	1,00	0,97
90°	6,12	0,00	9,47	49,7°	13,8°	1,00	1,00
110°	5,92	2,03	7,74	64,2°	7,5°	1,00	1,00
120°	5,76	2,88	6,76	72,7°	5,1°	1,00	1,00
135°	5,27	3,73	5,29	90,3°	2,9°	1,00	1,00
150°	4,55	3,94	4,22	117,4°	1,7°	1,00	1,00
165°	3,98	3,84	3,82	149,4°	1,2°	1,00	1,00
180°	3,79	3,79	3,73	180,0°	1,0°	1,00	1,00
151,1° (r)	4,50	3,94	4,17	119,6°	1,6°	1,00	1,00

TWS = 10 Kts

TWA	BTV	VMG	AWS	AWA	Heel	Reef	Flat
39,3° (b)	4,99	3,86	13,39	25,0°	14,0°	1,00	0,65
52°	5,78	3,56	13,39	31,2°	17,0°	0,99	0,70
60°	6,05	3,02	13,07	35,4°	18,3°	1,00	0,72
70°	6,32	2,16	12,51	40,8°	19,2°	0,99	0,80
75°	6,42	1,66	12,18	43,7°	19,1°	0,98	0,87
80°	6,54	1,14	11,81	46,4°	20,0°	1,00	0,91
90°	6,65	0,00	11,11	53,2°	16,7°	1,00	1,00
110°	6,51	2,23	9,25	69,0°	10,5°	1,00	1,00
120°	6,25	3,13	8,19	78,9°	7,0°	1,00	1,00
135°	5,88	4,16	6,65	96,4°	3,7°	1,00	1,00
150°	5,34	4,63	5,45	120,7°	2,1°	1,00	1,00
165°	4,79	4,62	4,94	150,5°	1,4°	1,00	1,00
180°	4,60	4,60	4,80	180,0°	0,4°	1,00	1,00
156,3° (r)	5,09	4,67	5,14	133,0°	1,7°	1,00	1,00

TWS = 12 Kts

TWA	BTV	VMG	AWS	AWA	Heel	Reef	Flat
43,0° (b)	1,55	1,14	10,42	36,7°	-11,0°	0,10	0,62
52°	5,91	3,64	15,09	32,9°	18,7°	0,95	0,64
60°	6,20	3,10	14,75	37,5°	19,7°	0,98	0,62
70°	6,51	2,23	14,14	43,3°	20,5°	1,00	0,66
75°	6,65	1,72	13,74	46,3°	20,9°	0,94	0,81
80°	6,80	1,18	13,21	48,7°	24,0°	0,99	0,79
90°	7,08	0,00	12,37	55,1°	23,7°	1,00	0,93
110°	7,19	2,46	10,67	71,6°	15,6°	1,00	1,00
120°	6,82	3,41	9,65	82,8°	9,7°	1,00	1,00
135°	6,34	4,48	8,08	101,5°	4,8°	1,00	1,00
150°	5,88	5,09	6,82	124,5°	2,7°	1,00	1,00
165°	5,46	5,28	6,18	151,8°	1,7°	1,00	1,00
180°	5,30	5,30	5,98	180,0°	0,4°	1,00	1,00
177,2° (r)	5,31	5,30	5,98	174,7°	0,5°	1,00	1,00

TWS = 14 Kts

TWA	BTV	VMG	AWS	AWA	Heel	Reef	Flat
43,1° (b)	5,49	4,01	16,91	29,2°	18,0°	0,85	0,68
52°	6,00	3,69	16,75	34,4°	19,3°	0,89	0,62
60°	6,28	3,14	16,20	38,7°	23,2°	0,92	0,62
70°	6,65	2,27	15,54	44,9°	23,7°	0,94	0,66
75°	6,81	1,76	15,13	48,0°	24,2°	0,94	0,71
80°	6,97	1,21	14,72	51,4°	24,1°	0,94	0,76
90°	7,34	0,00	13,84	58,0°	24,4°	1,00	0,79
110°	8,04	2,75	12,07	72,7°	19,6°	1,00	1,00
120°	7,59	3,79	11,04	84,5°	13,7°	1,00	1,00
135°	6,84	4,84	9,53	104,7°	6,1°	1,00	1,00
150°	6,31	5,47	8,28	127,7°	3,4°	1,00	1,00
165°	5,93	5,73	7,60	153,4°	2,0°	1,00	1,00
180°	5,82	5,82	7,34	180,0°	1,3°	1,00	1,00
179,2° (r)	5,82	5,82	7,34	178,5°	1,4°	1,00	1,00

TWS = 16 Kts

TWA	BTV	VMG	AWS	AWA	Heel	Reef	Flat
43,3° (b)	5,59	4,07	18,62	30,2°	18,7°	0,82	0,62
52°	6,05	3,72	18,37	35,6°	19,8°	0,83	0,62
60°	6,37	3,19	17,94	40,7°	20,7°	0,85	0,62
70°	6,75	2,31	17,06	46,7°	23,7°	0,84	0,73
75°	6,93	1,79	16,64	50,1°	24,0°	0,84	0,78
80°	7,11	1,24	16,20	53,5°	24,0°	0,84	0,85
90°	7,55	0,00	15,23	60,3°	24,9°	0,89	0,87
110°	8,54	2,92	13,37	74,9°	21,8°	0,97	0,94
120°	8,55	4,28	12,01	84,6°	21,6°	1,00	1,00
135°	7,47	5,28	10,94	106,5°	8,0°	1,00	1,00
150°	6,78	5,87	9,73	129,7°	4,3°	1,00	1,00
165°	6,34	6,12	9,08	154,6°	2,4°	1,00	1,00
180°	6,22	6,22	8,82	180,0°	1,4°	1,00	1,00
179,2° (r)	6,22	6,22	8,82	178,6°	1,5°	1,00	1,00

TWS = 20 Kts

TWA	BTV	VMG	AWS	AWA	Heel	Reef	Flat
44,2° (b)	5,61	4,02	21,75	32,5°	19,4°	0,69	0,69
52°	5,19	3,20	21,10	39,6°	18,6°	0,69	0,84
60°	6,43	3,22	20,90	42,7°	23,3°	0,76	0,62
70°	6,86	2,35	20,07	49,8°	24,0°	0,75	0,73
75°	7,09	1,83	19,70	53,5°	23,6°	0,75	0,76
80°	7,33	1,27	19,20	57,1°	24,2°	0,76	0,79
90°	7,90	0,00	18,25	64,4°	24,4°	0,82	0,80
110°	9,22	3,15	15,76	79,2°	26,0°	0,93	0,90
120°	10,39	5,19	14,85	85,5°	21,9°	0,93	0,94
135°	9,35	6,61	13,38	106,7°	14,0°	1,00	1,00
150°	7,99	6,92	12,45	131,6°	6,5°	1,00	1,00
165°	7,25	7,00	11,92	156,0°	4,1°	1,00	1,00
180°	7,08	7,08	11,71	180,0°	1,9°	1,00	1,00
178,1° (r)	7,09	7,09	11,71	177,0°	2,1°	1,00	1,00

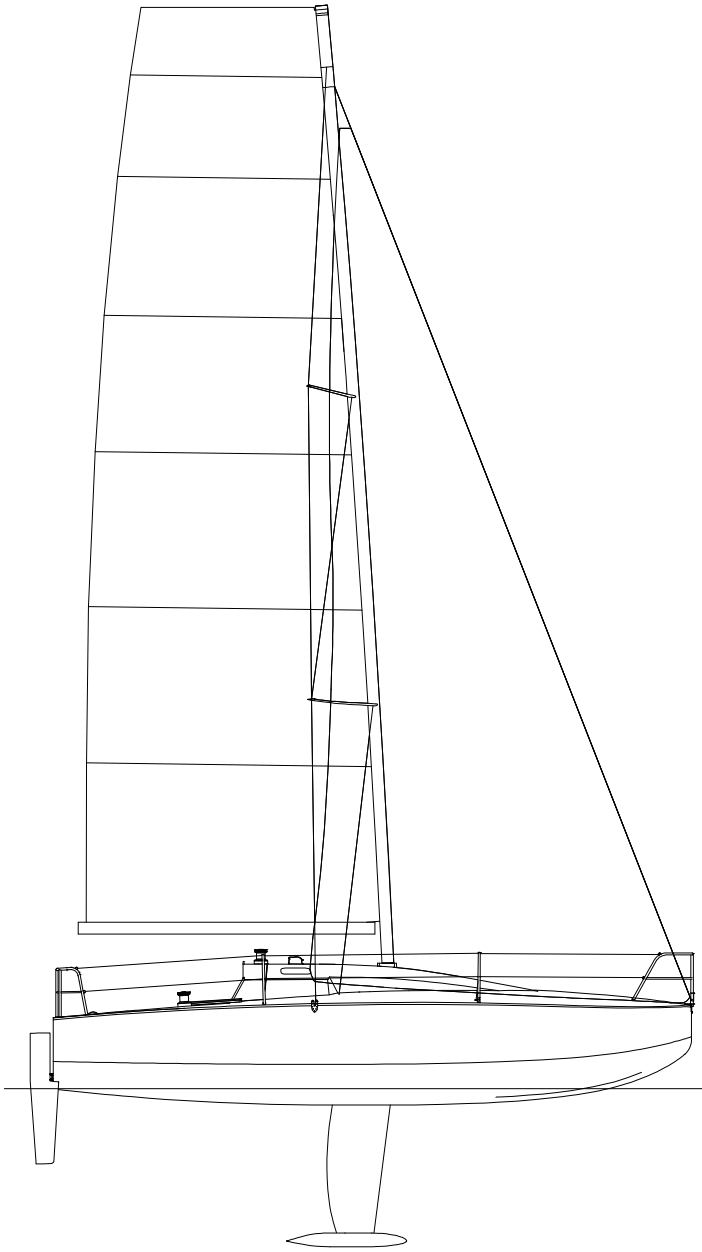

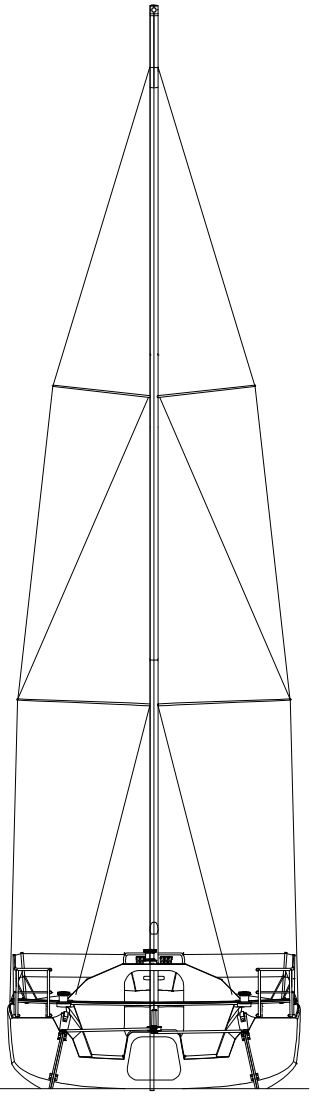

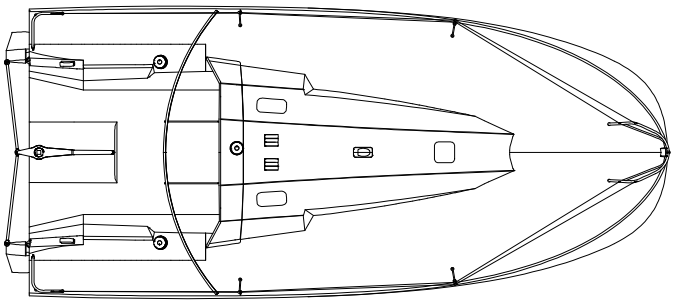

CARACTERISTIQUES:

Hull lenght: 6.50 m.
Hull width: 2.98 m.
Draft: 1.60 m.
Weight: 990 kg with batteries and liferaft
Lest: 410 kg env.

Mainsail:	24.0 m²
Solent jib, 1 reef:	19.0 m²
Code 0:	25.0 m²
Head gennaker:	38.0 m²
Medium spinnaker:	63.0 m²
Maxi spinnaker:	80.0 m²

Hull: Glass, polyester resin, laminated by infusion. PET core
Deck: Glass - polyester sandwich, laminated by infusion. SAN core.

Structure: Glass - polyester sandwich, laminated by infusion. SAN core.

Rigging: AG+, 2 large spreaders, boomerang lower spreaders

Hardware: Harken. 2 options for main track..

Class Mini serial approved..

Conception Etienne BERTRAND *Projet N° 33*	Vector 6.5
Construction: Yacht-Service Sp.zo.o 71-726 Szczecin - Polska	Arrangement général
+48 91 31 21 307 info@yachtservice.com.pl	07-01-2018